SP-631-1

CAR STEREO SERVICE MANUAL

4-TRACK CASSETTE CAR STEREO TAPE PLAYER

TOYOTA PART No.	FUJITSU TEN MODEL No.	VEHICLE
86260-12110	SP-631-1	COROLLA

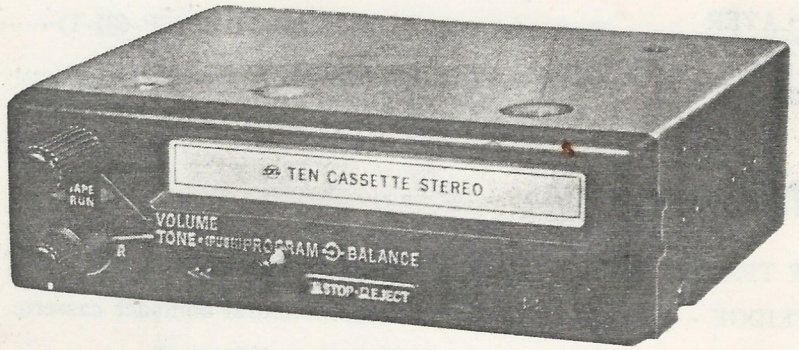

GENERAL

This cassette car stereo with the following features is designed for TOYOTA COROLLA manufactured after August 1979.

* Non-contact tape-end detecting system by using Hall IC and magnet
* Easy, speedy operation with locking FF/REW/EJECT button
* Built-in automatic switching system between the player and the existing genuine radio

TOYOTA MOTOR SALES CO., LTD.

COMPOSITION

◎ SEDAN, VAN and WAGON

TAPE PLAYER SETTING PARTS SET 86021-19145 (SP-631S1)

- Tape player assembly 86260-12110 (SP-631-1) 1
- Bracket, tape player (front right) 86265-12190 (RN-MBL-500) 1
- Bracket, tape player (front left) 86265-12200 (RN-MBL-501) 1
- Bracket, tape player (rear left) 86266-12110 (RN-MBL-502) 1
- Bracket, tape player (rear right) 86266-12100 (RN-MBL-503) 1
- Bracket, con ole mounting 58902-12010 (RN-MBE-386) 1
- Screw 93319-15008 (RN-MCW-B5×3S) 6
- Screw, tapping 93566-15514 (RN-MET-192) 4
- Bolt with washer 93386-15012 (RN-MBW-D5×12S) 2
- Wiring sub-assembly 86203-12020 (RN-EWJ-1049) 1

◎ COUPE, LIFTBACK

TAPE PLAYER SETTING PARTS SET 86021-12170 (SP-631S2)

- Tape player assembly 86260-12110 (SP-631-1) 1
- Screw 93319-15008 (RN-MCW-B5×8S) 3

SPECIFICATIONS

NUMBER OF TRACKS	4-track 2 channels
TAPE CARTRIDGE	Stereo/Monaural compact cassette
TAPE SPEED	4.76 cm/sec (1⅞ i.p.s)
CROSSTALK	40 dB or better between adjacent tracks 25 dB or better between left and right channels
WOW & FLUTTER	0.4% or less (WRMS)
PINCHROLLER PRESSURE	300 to 400g
TAKE-UP TORQUE	45 to 60 gcm
POWER OUTPUT	4 watts min. RMS (at T.H.D.=10%) per channel
SPEAKER IMPEDANCE	4 ohms per channel
POWER SUPPLY	12-volt car battery, negative terminal to ground
Voltage	13.2 VDC
Current	Approx. 0.56 ampere (at 0.5 watt output)
SEMICONDUCTOR	6 ICs, 5 diodes
DIMENSIONS	160(W)×50(H)×130(D)mm (6-5/16″, 1-31/32″, 5-⅛″)
WEIGHT	Player—1.2kg (2.6 lbs.)

REFERENCE

Alignment procedures in the factory are described below.

◎ Adjustment for pinchroller pressure

Hold a tension gauge indication to the pinchroller as shown in Fig. 2 (a), move the gauge as an arrow and observe the gauge at the point the pinchroller moves.

If the gauge shows under 300 gr., set the spring to B in Fig. 2 (b), and if it is more than 400 gr., set the spring to A.

This pressure should always be between 300 and 400 gr. for both of left and right pinchrollers.

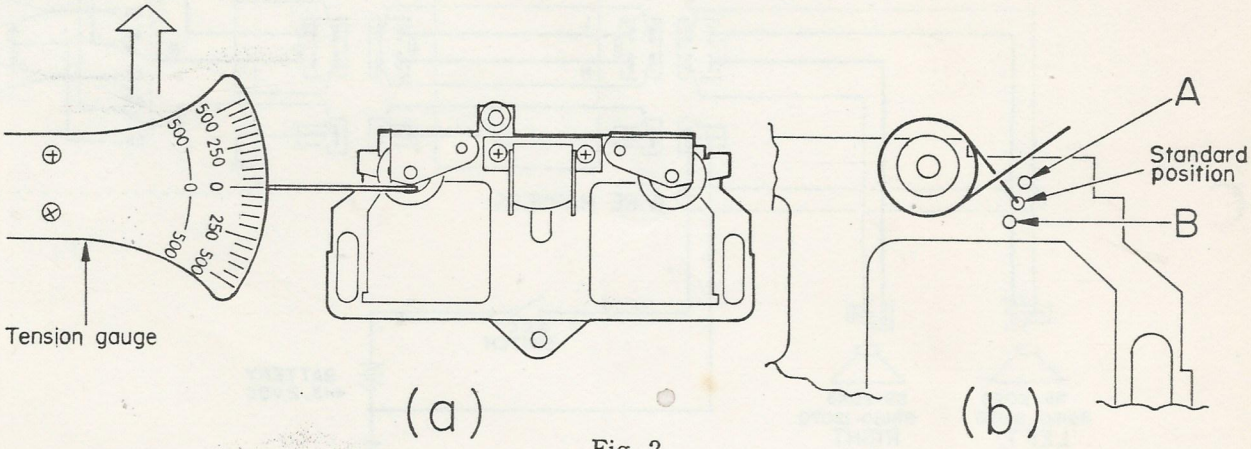

Fig. 2

◎ Adjustment for take-up torque

Measure the take-up torque of slip mechanism with a torque gauge while the motor is being driven.

If the torque shows 45g-cm or less, rotate the adjusting nut clockwise loosening the set-screw in Fig. 3. If it shows 60g-cm or more, rotate nut counterclockwise.

Adjust slip torque within 45~60g-cm ; 10 degrees of adjusting nut rotation correspond to 10g-cm torque variation.

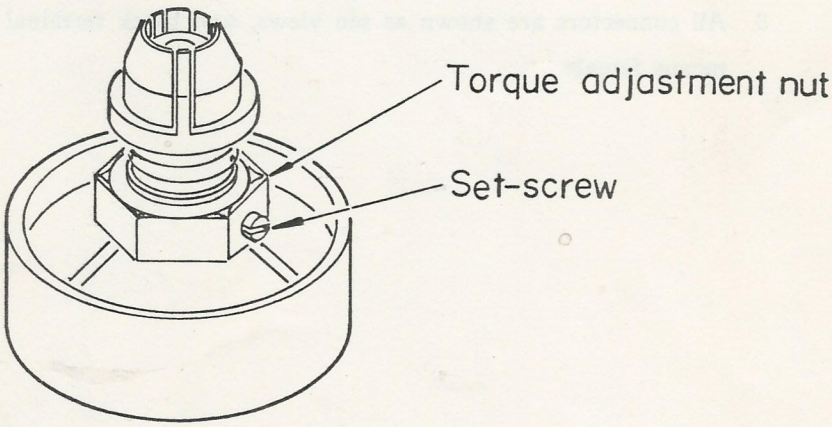

Fig. 3

TAPE PLAYER AND AUTO RADIO CONNECTION

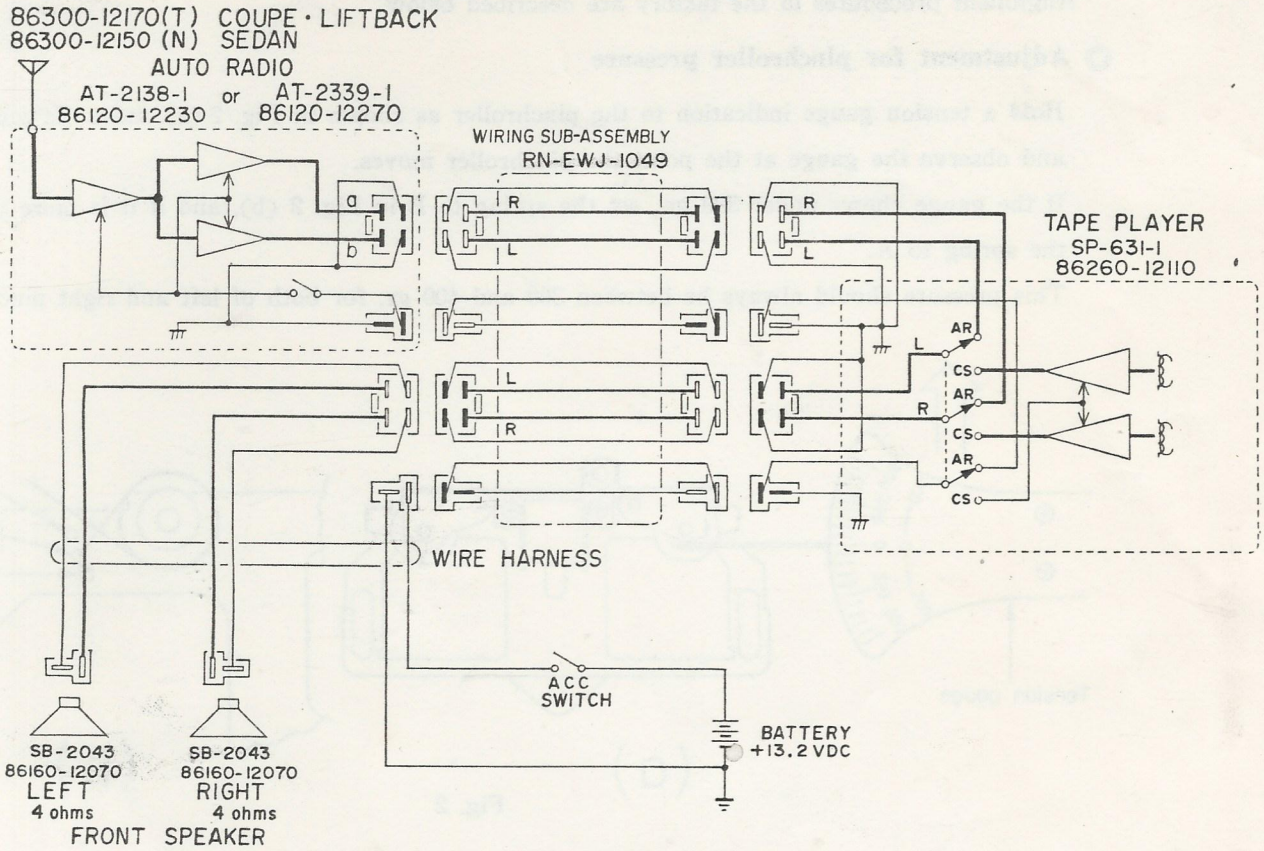

Fig. 1

NOTES: 1. As for the coupe, liftback series, the wiring sub-assembly (RN-EWJ-1049) is not required.

2. Connection of auto radio drawn in Fig. 1 is for 86120-12270 (AT-2339-1 AM/FM stereo radio). In case that 86120-12230 (AT-2138-1A AM radio) is connected, the speaker terminals (a,b) of the output connector are shorted and if the car stereo 86260-12110 (SP-631) is connected to 86120-12230 (AT-2138-1A AM radio), output of the auto radio is delivered to both L and R speaker for their operation.

3. All connectors are shown as pin views, and black terminal means male and white terminal means female.

EXPLODED VIEW

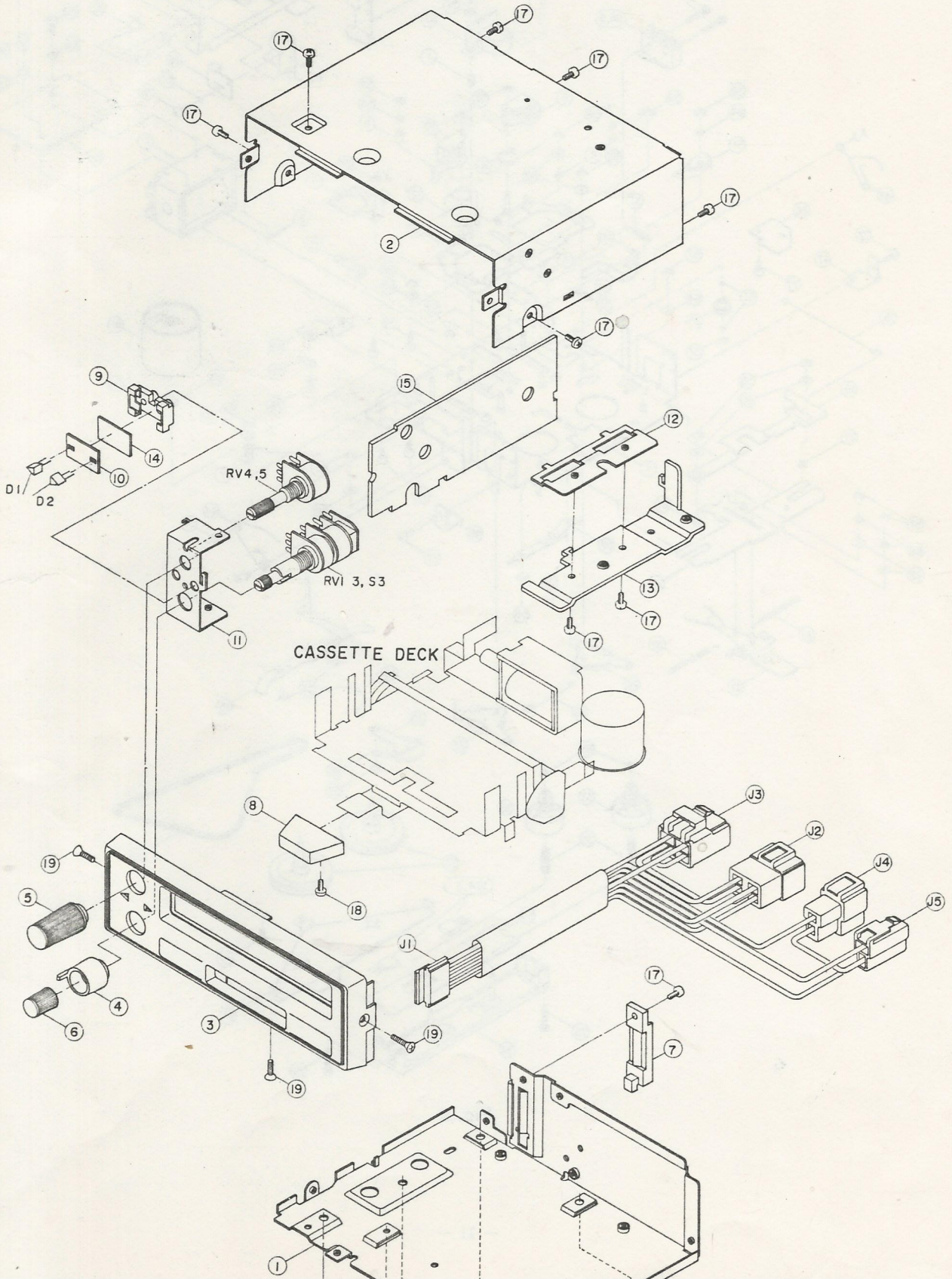

CASSETTE DECK

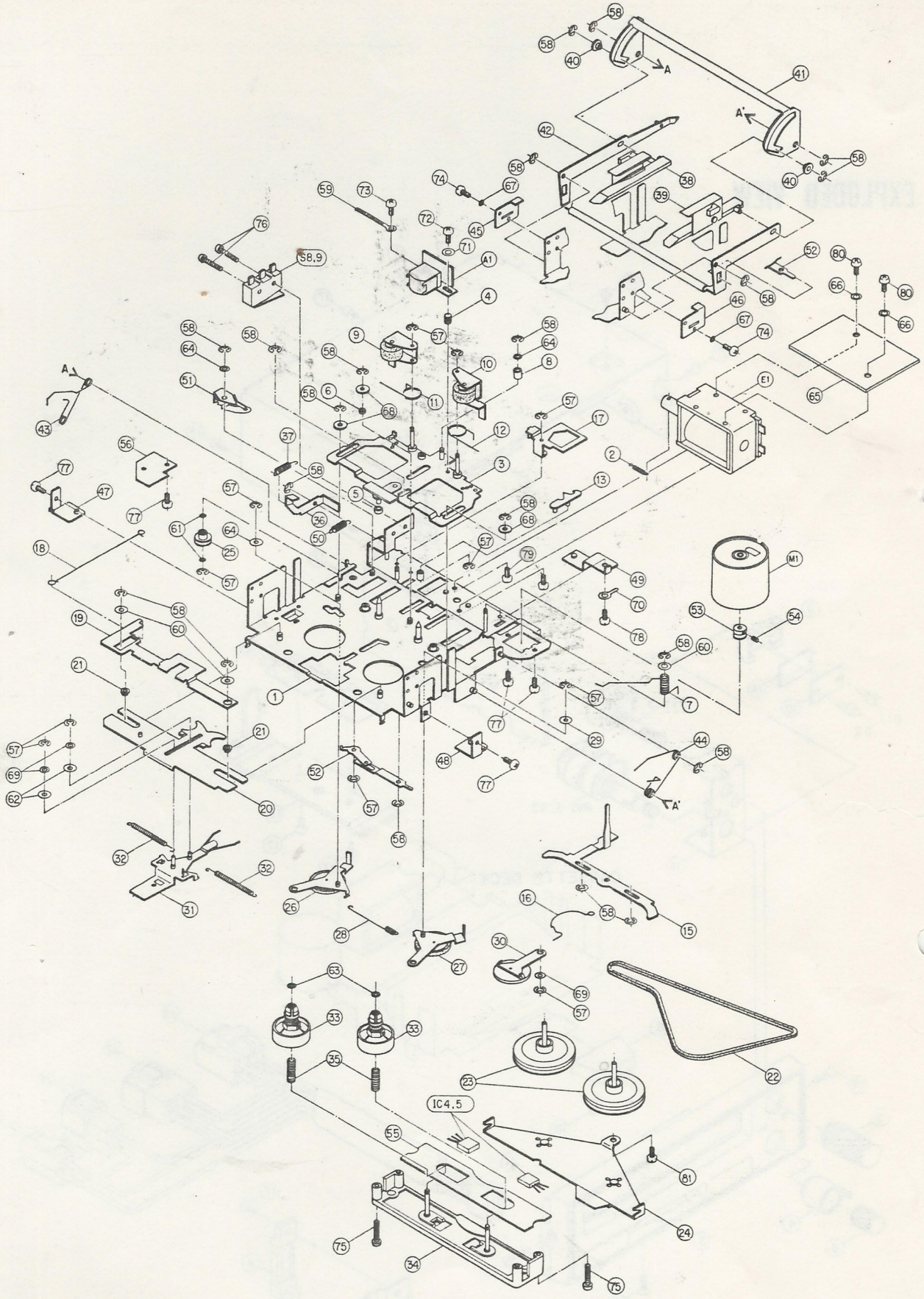

Fig. 8

Symbol No.	Stock No.	Description
MISCELLANEOUS ELECTRICAL		
J 1, 5	RN-EWJ-1093	Connector and lead assy., speaker and power supply
	RN-EWJ-835A	Wiring, playback head
	RN-EWJ-1047	Wiring, Hall IC
L 1	RN-ELL-4	Choke filter, 2.7mH
L 2	RN-ELL-330	Choke filter, 50μH
P 1	RN-EJU-S08V-259	8P Connector
RY 1	RN-EED-37	DC relay, Radio/player changing
RY 2	RN-EED-35C	DC relay, Program changing

Illus. No. (Fig. 7)	Stock No.	Description
MECHANICAL		
1	RN-MAD-223C	Chassis, bottom
2	RN-MAD-266	Chassis, top
3	RN-MDP-319	Escutcheon (includes door and shaft)
4	RN-MYD-109A	Knob, balance control
5	RN-MYN-116A	Knob, volume control
6	RN-MYN-150	Knob, tone and program changing
7	RN-MCE-134A	Clamp
8	RN-MYB-215	Button, stop and eject
9	RN-MSE-140A	Holder, LED
10	RN-MSE-144	Holder, LED
11	RN-MHU-131	Holder, volume control
12	RN-MHF-104	Holder, power IC
13	RN-MRE-131	Radiator, power IC
14	RN-MPM-788	PC board, LED
15	RN-MPC-151	PC board, min
16	F6-SBD-3×4S	Screw, 3×4mm
17	F6-SBD-3×6S	Screw, 3×6mm
18	F6-SBD-2.6×4S	Screw, 2.6×4mm
19	F6-SSA-3×6S-M-ZN2A	Flat screw, 3×6mm

REPLACEMENT PARTS LIST

Symbol No.	Stock No.	Description			
CAPACITORS					
$C_{1,2}$	RN-ECB-DOX102E	1000 pF	50V		ceramic
$C_{3,4}$	RN-ECE-MR47V50	.47 μF	〃		electrolytic
$C_{5,6,18,19}$	RN-ECE-M470V16-4	47 μF	16V		〃
$C_{7,8}$	RN-ECF-R153V50	.015 μF	50V		mylar
$C_{9,10}$	RN-ECY-MR22V16V-M1	.22 μF	16V		tantalum
$C_{11,27}$	RN-ECE-M101V16-1	100 μF	16V		electrolytic
$C_{12,13}$	RN-ECB-DBC104B	.1 μF	50V		ceramic
$C_{14,15}$	RN-ECK-DB222KY	2200 pF	〃		〃
$C_{16,17}$	RN-ECE-M101V10-4	100 μF	16V		electrolytic
C_{20}	RN-ECE-M102V16-7	1000 μF	〃		〃
$C_{21,22}$	RN-ECF-R154V50	.15 μF	50V		mylar
$C_{23,24}$	RN-ECE-M102V10-4	1000 μF	10V		electrolytic
$C_{25,26}$	RN-ECF-R473V50	.047 μF	50V		mylar
$C_{28,29}$	RN-ECK-DYW201K	200 pF	〃		ceramic
C_{30}	RN-ECH-RR68V100	.68 μF	100V		metalized paper
C_{31}	RN-ECE-M221V16-5	220 μF	16V		electrolytic
RESISTORS					
$R_{1,2}$	RN-ERD-AE333JB	33k ohms	5%	¼W	carbon
$R_{3,4}$	RN-ERD-AE101JB	100 ohms	〃	〃	〃
$R_{5,6}$	RN-ERD-AE822JB	8.2k ohms	〃	〃	〃
$R_{7,8}$	RN-ERD-AE104JB	100k ohms	〃	〃	〃
$R_{9,10}$	RN-ERD-AE562JB	5.6k ohms	〃	〃	〃
R_{11}	RN-ERD-AE181JB	180 ohms	5%	¼W	carbon
R_{12}	RN-ERD-AE331JB	330 ohms	〃	〃	〃
R_{13}	RN-ERC-CF821K	820 ohms	10%	½W	solid
R_{14}	RN-ERD-AE152JB	1.5k ohms	5%	¼W	carbon
$R_{15,16}$	RN-ERD-AE151JB	150 ohms	〃	〃	〃
$R_{17,18}$	RN-ERG-AG470JB	47 ohms	5%	¼W	metalized
R_{19}	RN-ERD-AE101JB	100 ohms	〃	〃	carbon
R_{20}	RN-ERC-AF6R8K	6.8 ohm	10%	½W	solid
VARIABLE RESISTORS					
$RV_{1,2,3}, S_3$	RN-ERV-2P3-97	Balance: 20k ohms, Tone: 10k ohms, S_3 Push PROGRAM switch			
$RV_{4,5}$	RN-ERV-1N2-133	Volume: 10k ohms			
SEMICONDUCTORS					
IC_1	MB3106M	Equalizer amplifier, linear-monolithic			
IC_2	MB3713M	Power amplifier, linear-monolithic			

CASSETTE DECK UNIT

Illus. No. (Fig. 8)	Stock No.	Description	Q'ty
ELECTRICAL			
A_1	RN-EHM-C44-26	Playback head (LTM)	1
E_1	RN-MKT-2A	Solenoid, program changing	1
M_1	RN-EDM-32	DC motor (MMT-3RF2J)	1
$IC_{4,5}$	RN-EID-DN6838	Tape end detector	2
$S_{1-1\sim1-4}$	RN-ESB-4N2-135	Push switch, program changing	1
S_6	RN-ESM-109	Micro switch, RADIO/PLAYER power supply changing	1
MECHANICAL			
1	RN-MAS-84	Chassis, tape deck	1
2	RN-MSC-220	Spring	1
3	RN-MYT-96	Slide plate, head and pinchroller mounting	1
4	RN-MSC-221	Spring, azimuth adjustment	1
5	RN-MRP-202	Roller, for ill. MYT-96	1
6	RN-MRP-178	Roller, for ill. MYT-96	1
7	RN-MSC-270	Spring, for ill. MYT-96	1
8	RN-MRP-205	Roller, for ill. MYT-96	1
9	RN-MKR-6	Pinchroller assembly (left)	1
10	RN-MKR-7	Pinchroller assembly (right)	1
11	RN-MSC-223	Spring, for ill. MKR-6 (left)	1
12	RN-MSC-224	Spring, for ill. MKR-7 (right)	1
13	RN-MUL-175	Lever, program changing	1
14	———	———	———
15	RN-MUL-228	Lever, pinchroller changing	1
16	RN-MSC-225	Spring, for ill. MUL-228	1
17	RN-MUL-178	Lever, FF/REW release	1
18	RN-MSE-132	Spacer, connection wire (MUL-178, 179)	1
19	RN-MUL-179	Lever, FF/REW lock	1
20	RN-MHG-38A	Cassette loading mechanism (FF/REW)	1
21	RN-MRP-190	Cassette loading mechanism slide	2
22	RN-MUB-29	Belt, drive	1
23	RN-MUF-24A	Flywheel with capstan	1
24	RN-MHU-139	Supporter, flywheel	1
25	RN-MRP-180A	Pulley, belt	1
26	RN-MKA-3A	Idler mechanism (left)	1
27	RN-MKA-4A	Idler mechanism (right)	1
28	RN-MSC-226	Spring, idler mechanism pressure	1
29	RN-MWS-121	Spacer, for ill. ㉖, ㉗	2
30	RN-MKA-5B	Idler mechanism	1
31	RN-MUL-231	Lever, stop eject and FF/REW	1
32	RN-MSC-227	Spring, lever (MUL-231) return	1
33	RN-MKS-10C	Slip mechanism	2
34	RN-MYT-88	Sub-chassis, slip mechanism	1
35	RN-MSC-252	Spring, back tension	2
36	RN-MUL-185	Lever, for S_6	1
37	RN-MSC-231	Spring, for ill. ㊱ lever (MUL-185)	1
38	RN-MHG-39	Cassette loading mechanism (left)	1
39	RN-MHG-40	Cassette loading mechanism (right)	1
40	RN-MRP-189	Spacer, for ill. ㊳ and ㊴	2

Illus. No. (Fig. 8)	Stock No.	Description	Q'ty
41	RN-MUL-223	Lever, for ill. ㊳ and ㊴	1
42	RN-MUL-187	Lever, for ill. ㊳ and ㊴	1
43	RN-MSC-251	Spring, for ill. ㊳ (left)	1
44	RN-MSC-240	Spring, for ill. ㊴ (right)	1
45	RN-MHL-179	Holder, for ill. ㊳	1
46	RN-MHL-180	Holder, for ill. ㊴	1
47	RN-MHL-170A	Supporter, cassette deck mounting (left)	1
48	RN-MHL-171A	Supporter, cassette deck mounting (right)	1
49	RN-MHZ-80A	Supporter, cassette deck mounting (back)	1
50	RN-MSC-260	Spring, muting switch	1
51	RN-MMS-13	Lever assembly, muting switch	1
52	RN-MUL-242	Lever assembly, eject	1
53	RN-MRP-175	Pulley, DC motor	1
54	F6-SHT-2×3	Screw, 2×3mm, motor pulley mounting	1
55	RN-MPM-910	PC board, Hall IC	1
56	RN-MPM-782	PC board, muting switch	1
57	F6-ER-1.5	E-type ring, snap (for 1.5mm shaft)	11
58	F6-ER-2	E-type ring, snap (for 2mm shaft)	20
59	RN-MCF-18	Clamp	1
60	RN-MWS-97	Washer,	3
61	RN-MWS-78	Washer	2
62	RN-MWP-79	Washer	2
63	RN-MWP-80A	Washer	2
64	F6-WK-3S	Washer, 3mm	2
65	RN-MPC-129	PC board, auto reverse	1
66	F6-WB-3S	Washer, 3mm	2
67	F6-WB-2S	Washer, 2mm	2
68	F6-WM-3S	Washer, 3mm	3
69	RN-MWS-124	Washer, 2mm	3
70	RN-HCF-10	Clamp	1
71	RN-MST-133	Spacer	1
72	RN-MET-233	Special screw, azimuth adjusting, 2×5mm	1
73	F6-SBD-2×5S	Screw, 2×5mm	1
74	F6-SBD-2×3S	Screw, 2×3mm	2
75	F6-SBD-2×10	Screw, 2×10mm	2
76	F6-SBD-2.3×8S	Screw, 2.3×8mm	2
77	F6-SBD-2.6×3S	Screw, 2.6×3mm	5
78	F6-SBD-2.6×4S	Screw, 2.6×4mm	1
79	F6-SBD-3×4S	Screw, 3×4mm	2
80	F6-SBD-3×5S-M-N1	Screw, 3×5mm, (WHT)	2
81	F6-SNA-2.6×3S	Flat screw, 2.6×3mm	1

Design and specifications subject to change without prior notice.

EXPLODED VIEW

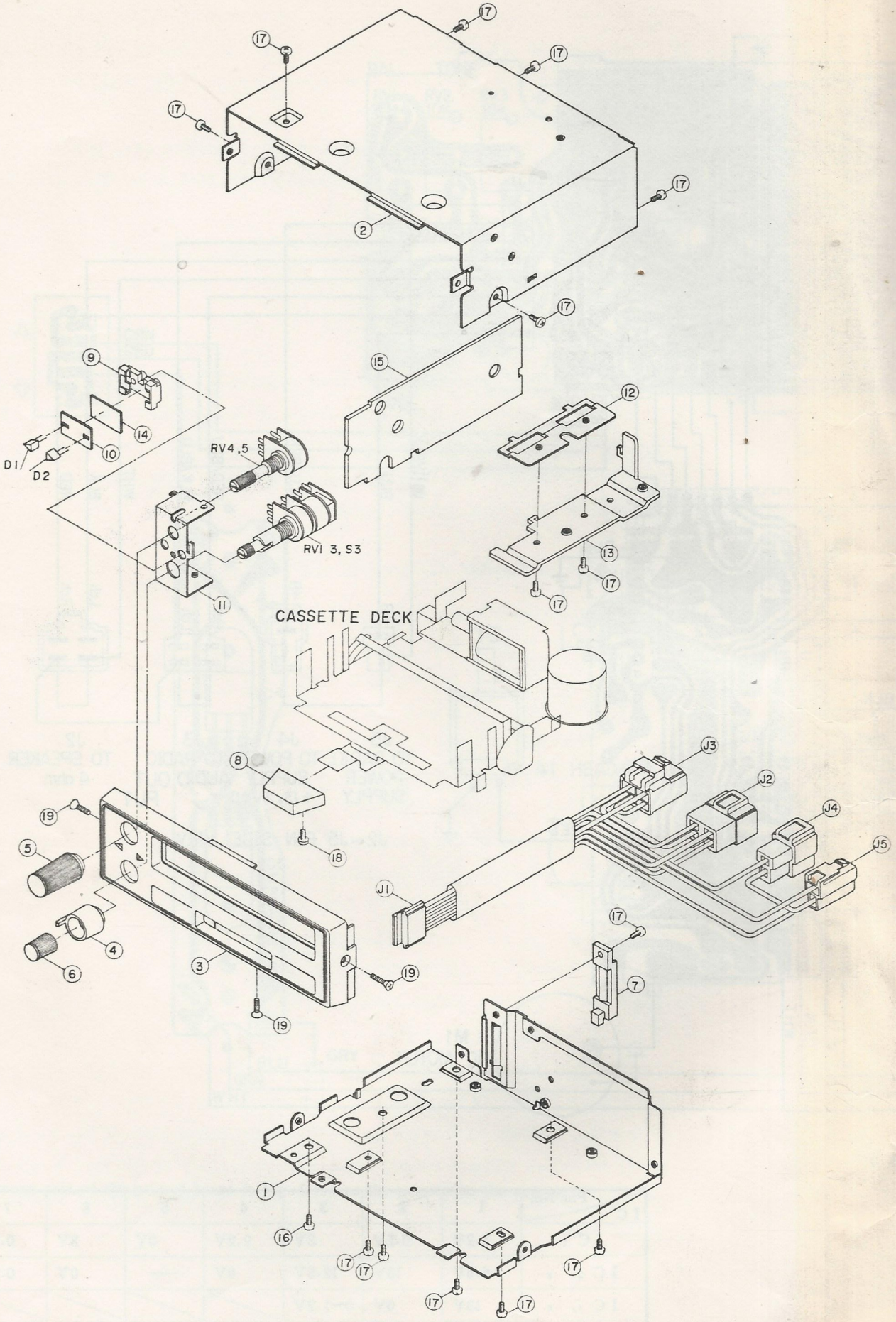

Fig. 7

◎ CLEANING

After extended use, the tape playback head and the drive capstan will build up a layer of iron oxide from the tape. The oxide layer in the case of the tape head prevents the tape from making full contact with the head and the result is a gradual loss of high frequency response and an increased noise level.

The oxide deposit on the capstan can cause slippage (wow) which might be mistaken for more serious mechanical drive problems.

A cleaner pen or similar object like the alcohol moistened swab is used.

Rub the parts such as playback head, capstan and pinchroller thoroughly to remove all traces of dirt and grime.

Do not use a solvent such as lighter fuel or lacquer thinner, which may cause damage to plastic parts orto instrument finish.

◎ DEMAGNETIZATION

The head may become magnetized over a period of time. A magnetized head will record noise on a tape even when it is being used for playback. It is important that the head be demagnetized periodically.

The head can be demagnetized with a commercial demagnetizer (or degausser, as it is sometimes called.)

Such an instrument is not expensive, and represents a good investment for the owner who wants to ke his equipment in the best possible condition.

◎ PLAYBACK HEAD ADJUSTMENT (Azimuth)

Normally the playback head is precisely aligned at the factory and further adjustment should not be required unless the playback head or its mounting components are replaced. Beware of excessive adjustment, because improper adjustment results in inferior performance. If the azimuth is unnecessarily varied, the angle gets out of order, which cause lowering of tonal quality. Carefully adjust the azimuth adjust screw as shown in Fig. 6.

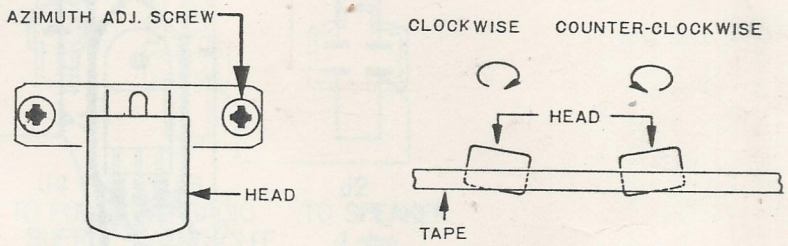

Fig. 6

* IN CASE OF USING TEST TAPE FOR AZIMUTH ADJUSTMENT

Insert a test tape for the azimuth adjustment and set the control knob to a proper level:

VOLUME CONTROL KNOB (VOL)..... In a proper level

BALANCE CONTROL KNOB (BAL) ..... In a center position

TONE CONTROL KNOB (TONE)..... Treble tone

Carefully adjust the azimuth adjust screw for maximum volume and treble tone. It is recommended that you connect a VTVM or circuit tester with the speaker terminals for obtaining the maximum value because test tape for azimuth adjustment is recorded high treble tones (6,300 Hz ordinary), and it is difficult to find the maximum volume without using test instrument. If test tape is not available, use a stereo tape with some high treble tones (piano or violin music is good for this) and follow the same procedure as outlined above.

WIRING ON PC BOARD

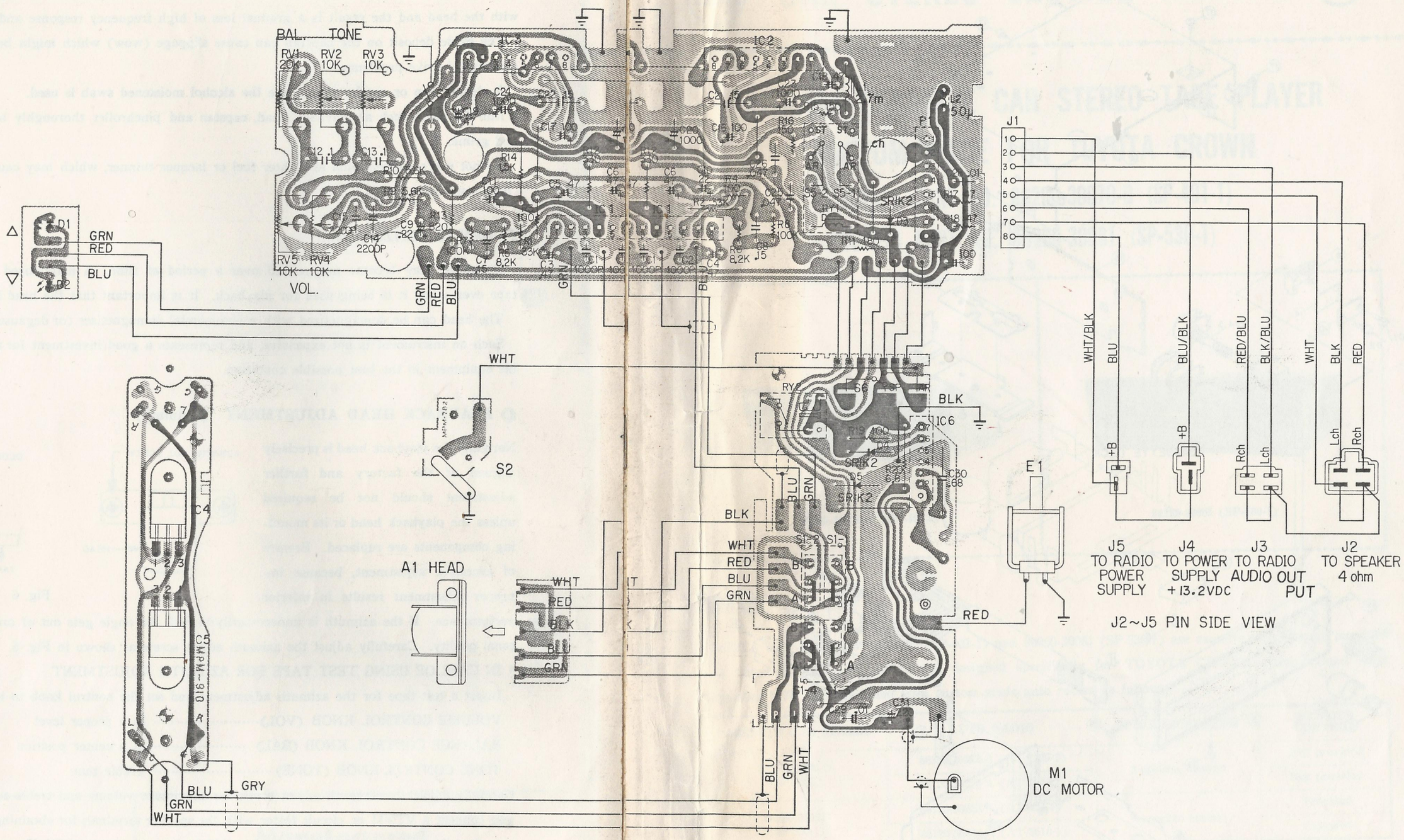

Fig. 5

NOTE: The orange part of the printed board in Fig. 6 means the pattern on the reverse.

IC \ Pin No.	1	2	3	4	5	6	7	8
IC 1	1.2V	0.7V	3V	9.2V	0V	3V	0.7V	1.2V
IC 2, 3	6.6V	13V	12.5V	0V	—	0V	0.6V	—
IC 4, 5	13V	0V	0~1.2V					
IC 6	2.4V	0~1.2V	1.2V	0V	0V	13.1V	11.8V	

SCHEMATIC

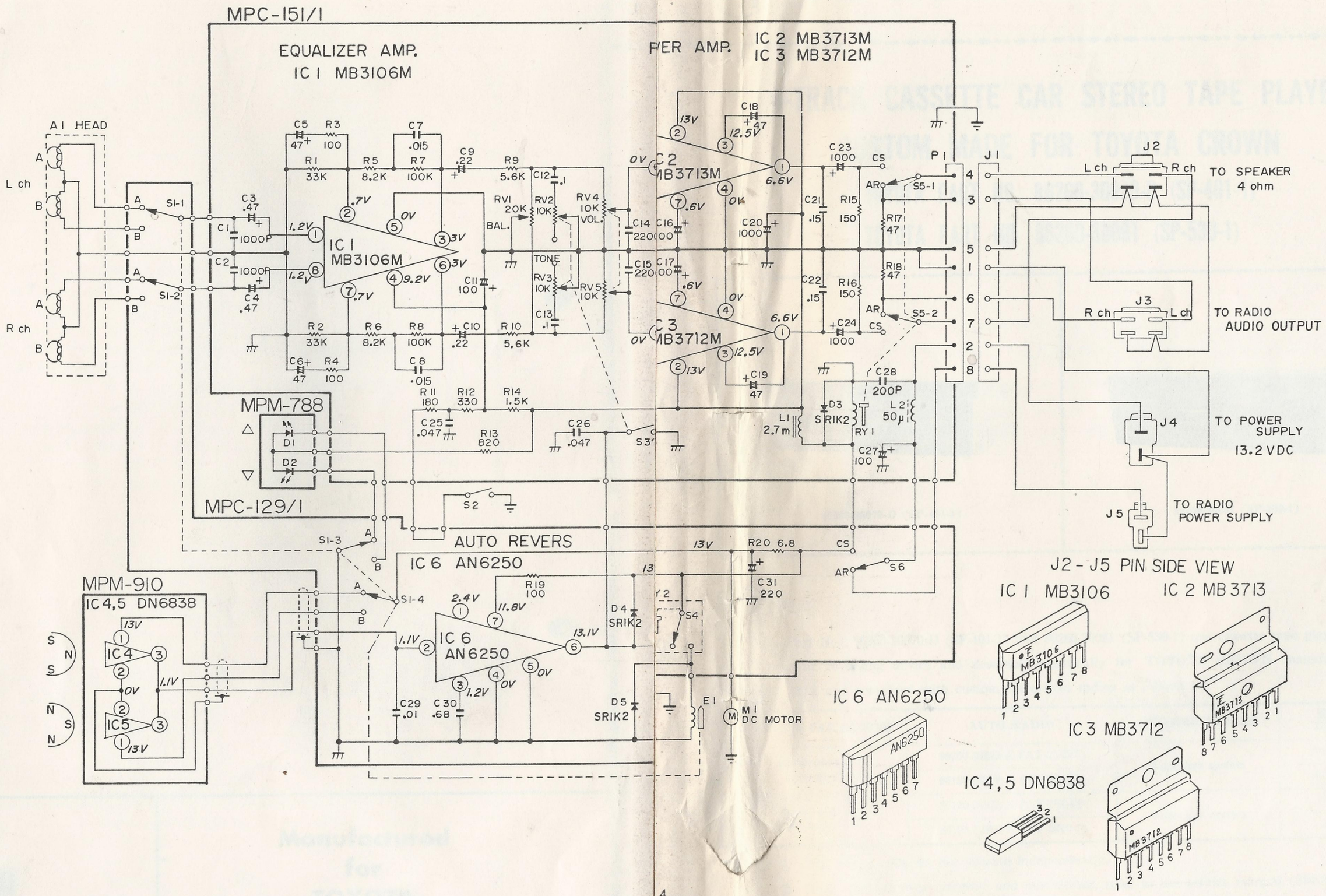

NOTES:

1. All resistance in ohms, K=10^3
2. All capacitance in μF, P=$\mu\mu$F
3. DC voltages against the chassis measured with 100k ohm/volt meter, power supply set at +13.2 VDC, no signal in put.